Embedded Systems (CS 503/591C)
Homework 3 Solutions

December 7, 2003

Question 1: Synchronous Serial Protocols

1. Explain in brief the role of the clock signal in synchronous serial protocols.

   The clock tells both sides when the value carried by the data line is valid. In SPI, the value is valid on a low-to-high or high-to-low transition (depending upon protocol). In I2C, the data must be valid for the duration of the positive pulse.

2. List the pros and cons of the SPI protocol over I2C (at least 2 each).

   (a) *PRO: SPI supports simultaneous bidirectional communication (so bandwidth is potentially twice as high).*

   (b) *CON: I2C requires fewer control/data lines.*

   (c) *PRO: Addresses in I2C are handled as data, reducing bandwidth available for data.*

   (d) *CON: I2C allows for multiple bus masters. Although this allows for greater flexibility in the network design, it does make the communication protocol more complex (i.e., one must deal with bus contention).*

3. Assume a 16f876 master with no other components. How many devices can be addressed with SPI? (assume no daisy-chaining)

The number of devices is equal to the number of spare digital output lines (one is required for each device). On the 16f876, these are: A0 .. A5, B0 .. B7, C0, C1, C2, C6, and C7. So: 19 devices.

4. How many devices can be addressed with I2C?

   We can simultaneously address both 7- and 10-bit devices. So, we can address on the order of $2^{10} + 2^7 - 2$ *(*-1 *to select 7/10 bit; and* -1 *for all call (which we did not talk about in class)).*

5. T/F: In SPI, both the slave and master generate a clock signal.

   False. Only the master generates the clock.

6. Assume an SPI master connected to a daisy-chained set of slaves. How is the chip select line used relative to the clock and data signals?

   The chip select line is brought low (or high) before the first bit is sent and brought high (low) after the bits to all of the devices have been clocked out. By using the chip select line in this way, the individual devices know which input bits are destined for them.

7. T/F: In I2C, the data must be valid on the high-to-low transition.

   True. The data must be valid during the entire time that the clock is high (including the transitions).

8. Explain in brief how an I2C master can detect that it is colliding on the bus with another master.

   All devices drive the clock and data lines low, but when they wish to indicate a high, they allow the line to float (relying on the pull-up resistor to bring the line high). A master can detect that another master is attempting to drive the bus by checking the state of the line (either the data or the clock) whenever it allows the line to float high. If the line does not return to high, then another master is pulling it low.

9. In I2C, outline the sequence of operations that a master performs when sending a single-byte command to a slave and then receiving two response bytes from the slave.

   The byte sequence is as follows:

   START
   SLAVE_ADDRESS (write to slave)

COMMAND BYTE
START
SLAVE_ADDRESS (read from slave)
READ BYTE (while generating clock); ACK = 0
READ BYTE (while generating clock); ACK = 1
STOP

Question 2: Semiconductors

1. What conditions must exist in order for electrons to move across a conductor or a semiconductor?

   There must be electrons that are relatively free to move; there must be holes into which electrons can move; and there must be an electrical potential from one end of the substrate to the other.

2. Explain in brief why a silicon crystal is an insulator.

   In a silicon crystal, each of the silicon atoms form a covalent bond with its neighbors. These bonds require a significant amount of energy in order to free an electron. Hence, there are very few free electrons and free holes in the crystal.

3. Aluminum atoms have a valence of 3. What does this mean when aluminum is inserted as an impurity into a silicon crystal?

   The aluminum atoms form a covalent bond with 3 of the 4 neighboring silicon atoms. This occupies the 3 electrons in the outer shell of the aluminum atom, but leaves the 4th silicon atom with a positive charge (forming a hole). Hence, very few electrons are not bound to atoms, but there are many holes to which electrons may be bound. This is a P-type semiconductor.

4. Define a depletion region. Why is it difficult for electrons to cross the depletion region?

   The depletion region is the zone surrounding the junction between a P- and an N-type semiconductor. Within this region, the free electrons of the N side move to fill the excess holes of the P side, leaving only weakly charged ions on either side of the junction. The width of the depletion region varies with the potential difference between the poles.

5. Current flows through the transistor when the potential difference between the base and the emitter achieves a certain level. Explain this effect (in brief) in terms of the depletion region.

   The connection from the base to the emitter can be thought of as a diode. Once the potential difference from the base to the emitter achieves a particular (threshold level), the depletion region shrinks to a degree that electrons are able to move across the N/P junction (hence allowing current to flow from base to emitter). In this case, current also flows from collector to emitter because: 1) the depletion region from collector to base is also very narrow and 2) the momentum of the electrons as they move from emitter to base carries many of them passed the base and on to the collector.

6. T/F: with PNP transistors, (non-trivial) current can only flow when the base voltage is less than the emitter voltage.

   True. The "diode" connecting the base to the emitter will only allow current to flow when base voltage is lower than the emitter voltage.

7. Give a simple implementation of an AND gate using only NPN transistors.

   Recall that for the transistor to be turned "on" the base voltage must be exceed the emitter voltage.

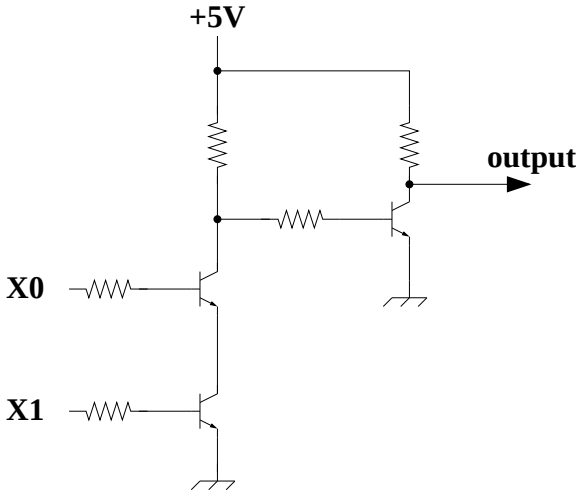

Question 3

How much time did you spend on this assignment?