(2 pts) Name:

CS 503/591C: Embedded Systems

Final Exam

December 15, 2003

Answer pieces in *italics* were not required to receive full points.

Problem	Topic	Max	Grade
0	-	2	
1	Serial Communication	20	
2	Resistance, Voltage and Current	40	
3	RC-Circuits	40	
4	Diodes and Work	25	
5	Op Amps	25	
6	Semiconductors	20	
7	PIC Timing	20	
8	Digital Processing	10	
9	Bonus	5	
Total		200	

1. **Serial Communication Protocols** (20 pts)

(a) (10 pts) Explain why we do not use a synchronous serial protocol with infrared transmission of data.

With synchronous serial protocols, we need at least two independent channels: one for data and one for the clock. Transmitting both over IR would require some mechanism for the receiver to sort out the two independent signals. This could be done using different carrier frequencies, different light wavelengths, or some form of multiplexing – all of which are rather complicated to implement (more than an asynchronous protocol). Also - we are expending a lot more energy to transmit the clock signal.

(b) (10 pts) List two possible mechanisms for device addressing in serial communication protocols.

i. *Separate device select lines.*

ii. *Encoding the address in the data stream.*

2. **Analog Electronics: Resistance, Voltage, and Current** (40 pts)

In the following circuit, assume that V_0, $R1$ and $R2$ are known:

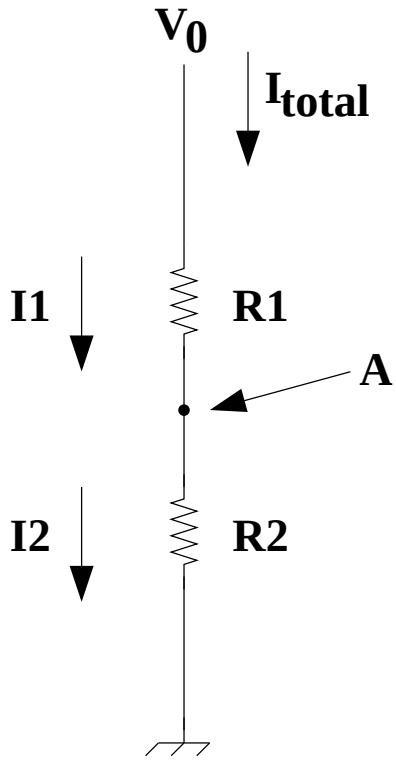

(a) (10 pts) State Ohm's Law and Kirchoff's current law.

$\Delta V = IR$

and "the sum of all currents into a point must be zero."

(b) (5 pts) Given (a), what is the relationship of I_1, I_2, and I_{total}?

According to Kirchoff's current law:

$I_{total} = I_1 = I_2$

(c) (5 pts) Suppose the voltage at point A (V_A) is known. State (simply) I_1 and I_2 in terms of the known variables.

$I_1 = \frac{V_0 - V_A}{R1}$ *and*

$I_2 = \frac{V_A}{R2}$

(d) (10 pts) Given (b) and (c), derive an expression for V_A in terms of V_0, $R1$, and $R2$. Show your work.

Given Kirchoff's law, we know that $I_1 = I_2$. Therefore:

$$\begin{aligned} \frac{V_0 - V_A}{R1} &= \frac{V_A}{R2} \\ V_0 R2 &= V_A(R1 + R2) \\ V_A &= \frac{V_0 R2}{R1 + R2} \end{aligned}$$

(e) (10 pts) Given your above answers, derive the total resistance of the circuit. Show your work.

Applying Ohm's law:

$V_0 = I_{total} * R_{effective}$.

Therefore:

$$\begin{aligned} R_{effective} &= \frac{V_0}{I_{total}} \\ &= \frac{V_0}{\frac{V_A}{R2}} \\ &= \frac{V_0}{\frac{V_0 R2}{R_2(R1+R2)}} \\ &= \frac{1}{\frac{1}{R1+R2}} \\ &= R1 + R2 \end{aligned}$$

3. **Analog Electronics: RC-Circuits** (40 pts)

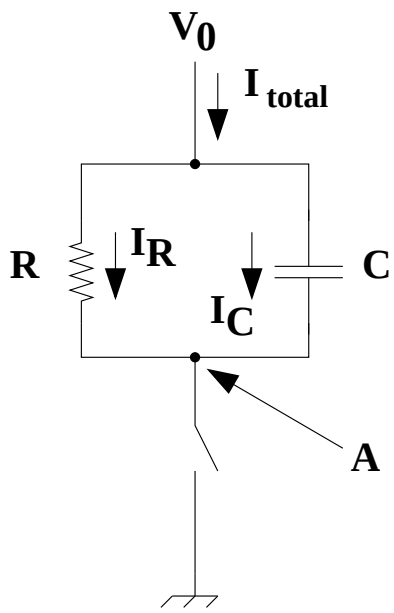

Assume $V_0 = 5V$, $R = 100\Omega$ and $C = 10\mu F$

(a) (10 pts) What is the steady-state voltage at point **A** when the switch is open? What is I_{total}?

$V_A = 5V$ *and* $I_{total} = 0A$.

(b) (10 pts) What is the steady-state voltage at point **A** when the switch is closed? What is I_{total}?

$V_A = 0V$ *and* $I_{total} = .05A$

(c) (5 pts) Assume that the switch transitions from opened (and in steady state) to closed at time $t = 0$. What is the voltage at point A as a function of time?

As soon as the switch is closed, point A is equivalent to ground.
Therefore: $V_A(t) = 0V$

(d) (15 pts) Assume that the switch transitions from closed (in steady state) to opened at time $t = 0$. What is the voltage at point A as a function of time? Show the derivation.

When the switch opens, the capacitor begins to discharge through the resistor.

From Kirchoff's current law:

$I_R + I_C = 0.$

Therefore:

$\frac{V_0 - V_a(t)}{R} + C\frac{dV_C}{dt}$, *where:*

$V_C(t) = V_0 - V_A(t).$

Rearranging, we get:

$\frac{-dt}{RC} = \frac{dV_C}{V_0 - V_A(t)}.$

Integrating both sides from time 0 to T, we have:

$\frac{-t}{RC}|_0^T = ln(V_0 - V_A(t))|_{V_A(0)}^{V_A(T)}.$

This simplifies to:

$\frac{-T}{RC} = ln\left(\frac{V_0 - V_A(T)}{V_0 - V_A(0)}\right).$

And then to:

$\frac{-T}{RC} = ln\left(\frac{V_0 - V_A(T)}{V_0}\right).$

Raising e to each side, we have:

$e^{-T/RC} = \frac{V_0 - V_A(T)}{V_0}.$

Solving for $V_A(T)$, we have:

$V_A(T) = V_0\left(1 - e^{-T/RC}\right).$

4. **Analog Circuits: Diodes and Work** (25 pts)

(a) (5 pts) Given the following circuit, assume that the voltage drop across the LED is $1V$. What is the total current through the LED?

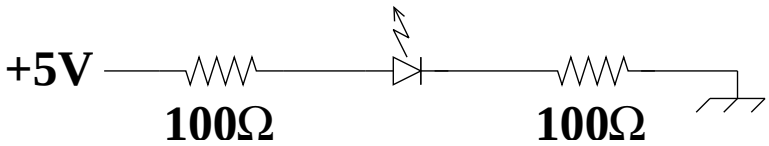

$I = (5V - 1V)/200\Omega = .02A = 20mA$

(b) (10 pts) How much work is being performed by the LED? In what form does it manifest itself?

$Work = 1V * .02A = 20mW$

The work manifests itself primarily as light (with a bit of heat).

(c) (10 pts) How much work is being performed by the resistors? In what form does it manifest itself?

$Work = (5V - 4V) * .02A = 80mW$

Note that in the equation, we have treated the resistors as a single unit (it works out either way).

The work manifests itself as heat.

5. **Op Amps** (25 pts)

(a) (5 pts) Define the **gain** of an amplifier.

An amplifier alters the range of a signal. In the ideal case of the amplifier linearly scaling the signal, the **gain** *is the scale factor.*

(b) (10 pts) List two properties of an **ideal** operational amplifier.

i. *Infinite input impedance (the inputs do not draw current).*

ii. *Zero output impedance (the output is capable of generating infinite current)*

iii. *Infinite open-loop voltage gain*

iv. *Output voltage is zero when the inputs are the same*

v. *The output can respond to changes in the inputs infinitely fast*

(c) (10 pts) Given the circuit below: suppose V_{in} is a sinusoidal signal with a maximum of $100mV$ and a minimum of $-50mV$. Describe V_{out} in detail.

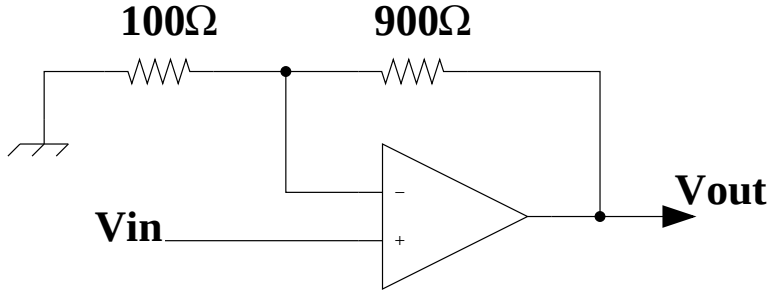

With this Op Amp configuration, we have a positive gain of 10. Therefore, the output is also sinusoidal, but in the range of $1V$ *to* $500mV$.

6. **Semiconductors** (20 pts)

(a) (10 pts) Describe in brief what differentiates a semiconductor from a conductor.

A conductor readily gives up electrons, leaving holes behind that can accept other electrons. This behavior allows for the flow of current through the conductor.

A semiconductor is made from a material that is largely non-conductive (due to the strong covalent bonds that the atoms make with their neighbors). However, impurities are introduced into this crystal that can release an electron (with little energy; this is an N-type semiconductor) or accept an extra electron (this is a P-type semiconductor). Flow of current through the semiconductor relies on accepting extra electrons from another material (for P-type) or releasing electrons to another material (for N-type). Taken together, these properties imply that 1) the semiconductor will not allow current flows to the degree that a conductor does, and 2) the magnitude of current flow is highly dependent on the magnitude and polarity of the potential difference across the material.

(b) (10 pts) Describe the phenomena of the diode threshold potential in terms of semiconductors.

When a P-type and an N-type semiconductor are brought together, the excess electrons near the junction on the N side move to fill holes on the P-side. This forms a **depletion region** *around the junction in which there are very few free electrons and holes. Thus, electrons (and hence current) are impeded from crossing the junction.*

When a positive potential (as measured from the P-side pole to the N-side pole) is applied across the material, the electrons move toward the P-side pole and the holes move toward the opposite pole. This has the effect of decreasing the width of the depletion region. When this width reaches a critical level (at the **threshold potential***), electrons are able to move freely across the junction.*

7. **PIC Timing** (20 pts)

FIGURE 8-1: TIMER2 BLOCK DIAGRAM

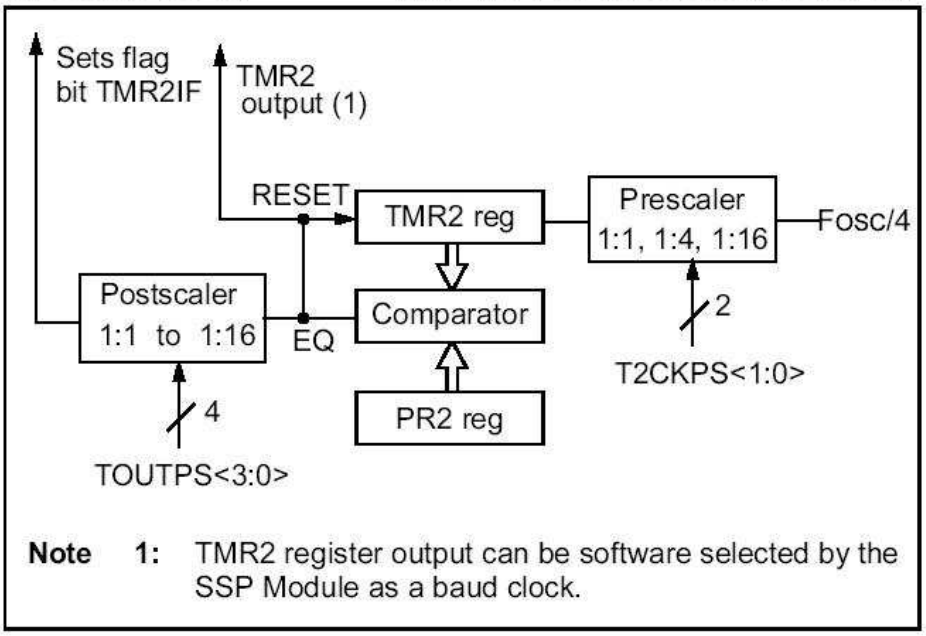

Suppose we are using timer 2 on our PIC configuration with a prescaler of 4, a postscaler of 5, and a timeout value of 50.

(a) (5 pts) What is the interrupt frequency?

$5KHz$

(b) (5 pts) How often does the timer 2 counter turn over between interrupts?

5 *(the value of the postscaler)*

(c) (10 pts) Suppose the corresponding ISR increments a global counter called **clock**. Give pseudo code for a main routine that executes **task1()** every $1ms$ and **task2()** every $2ms$. You may assume these tasks require a trivial amount of time to execute.

The ISR period is $200\mu s$*. So - we need to schedule task 1 every 5 ticks and task 2 every 10 ticks.*

```
while(1) {
   tmp = clock;
   if(tmp % 5 == 0) {
     task1();
   }
   if(tmp % 10 == 0) {
     task2();
   }
   while(tmp == clock);  // Make sure that the clock ticks once
}
```

8. **Digital Processing** (10 pts)

(a) (5 pts) Explain the problem that a *debounce mechanism* addresses.

Mechanical switches do not instantaneously switch state. Instead, it is often the case that one will see multiple close/open events during a single switch operation. **Debouncing** *is the process of interpreting these multiple events as a single one.*

(b) (5 pts) Outline the implementation of one debounce mechanism.

One possible answer: we can employ an RC-circuit to smooth out the signal such that the computer will only see a single transition from low-to-high or high-to-low.

Another possibility: in software, we can sample the line multiple times during an event and only report it once the state of the line is consistent over several samples.

9. **Bonus Question: Standards** (5 pts)

(a) (5 pts) Suggest and defend an alternative to the master/slave terminology.

Any reasonable answer will do.