Today

- Practical issues in digital logic implementation
- Project 1

Administrivia

Make sure you fill out and hand-in group placement forms today

Solderless Breadboards

mbus.net

Power bus (red)

Ground bus (blue)

Component bus

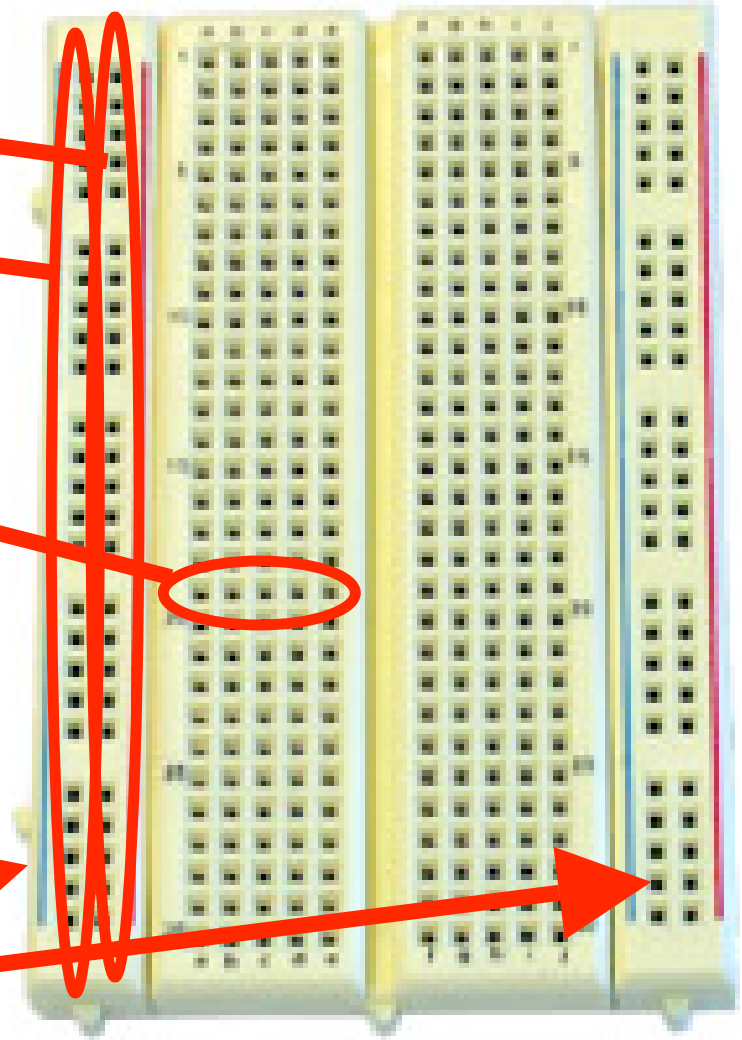

Note that the two sides are not connected

Wiring Standards

When possible, use wire colors for different types of signals:

- Black: ground
- Red: power
- Other: various signals

Clean Wiring

A clean breadboard will make debugging easier – and it makes circuits more robust

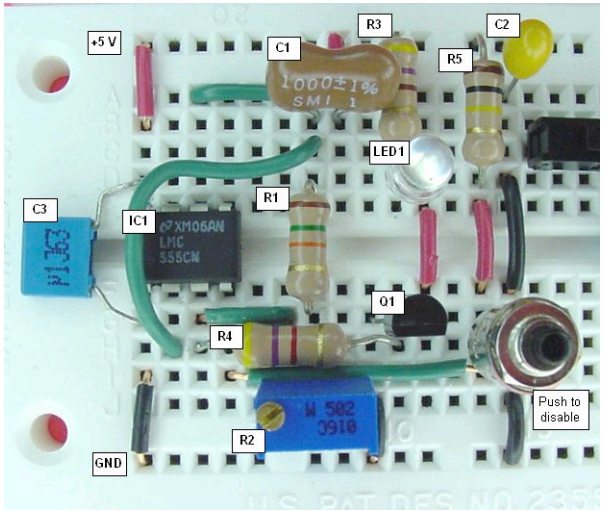

www.linefollowing.com

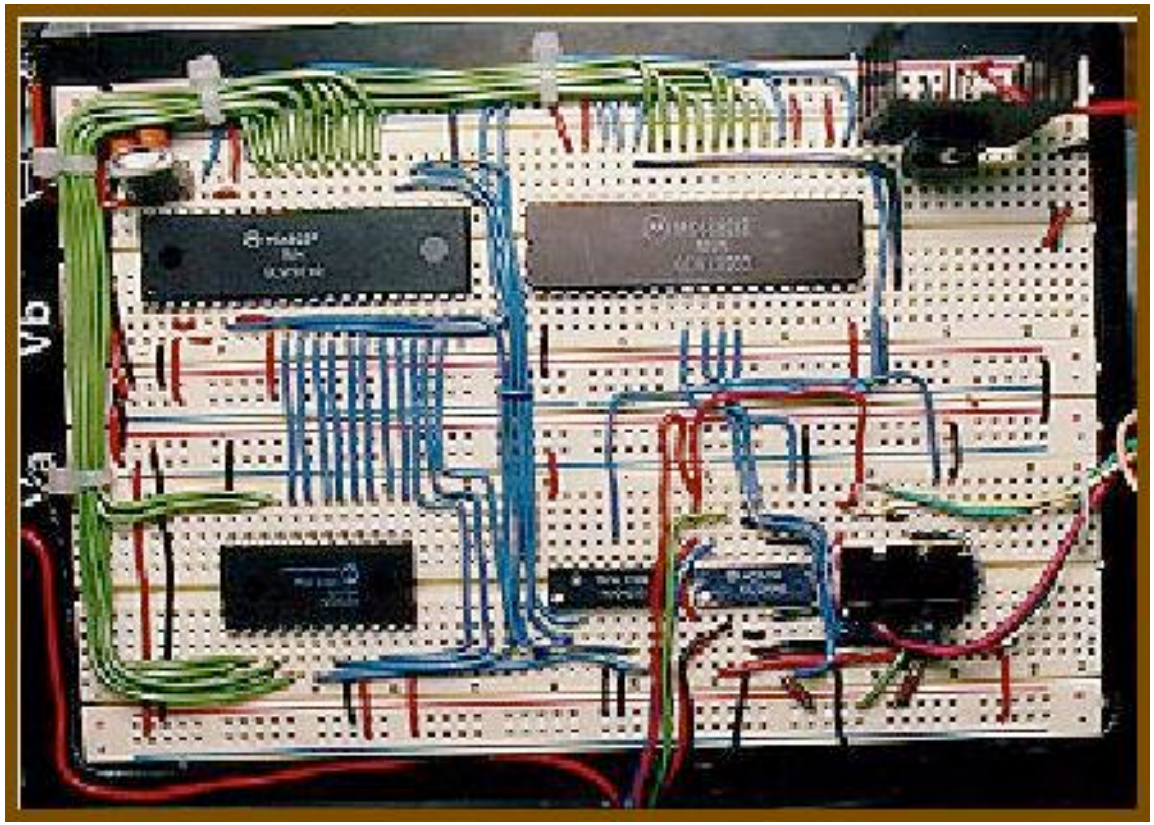

tangentsoft.net

Care with Power

- Only insert components and wires into the breadboard when power is disconnected
- “Wire, check-twice, then power”
  - Never reverse power and ground (this is a very common mistake)
- Most chips that we will use expect +5V
  - More can destroy the chips
  - We will use DC/DC converters to step battery voltages down to +5V

Care of Chips

- Use insertion and extraction tools: never your fingers
- Minimize your contact with pins: static electricity can destroy a chip
- Use a wrist strap when you handle chips

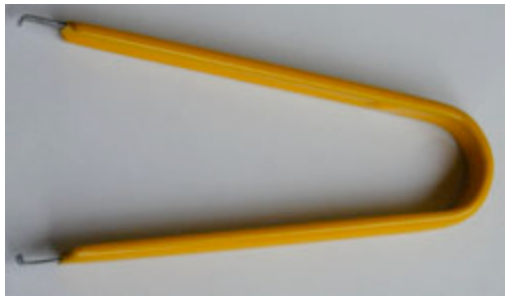

www.a7vtroubleshooting.com

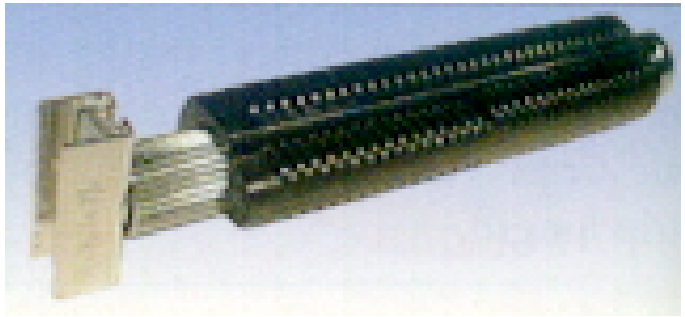

www.chantronics.com.au

www.hvwtech.com

TTL Chips: 2-Input AND Gates

Chip number: 7408

Power

Pin 1 is marked on the chip

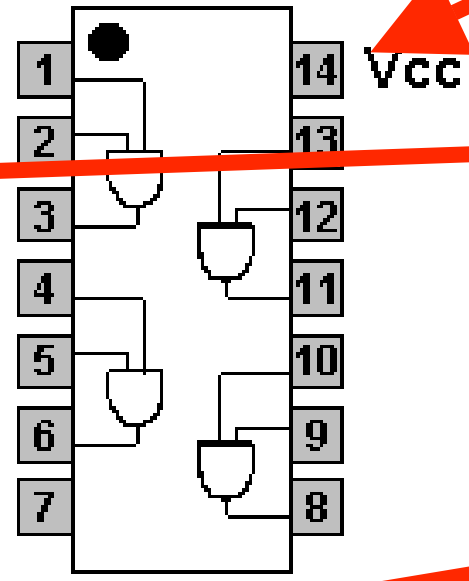

Ground

www.dcs.warwick.ac.uk

www2.117.ne.jp

TTL Chips: 2-Input OR/XOR Gates

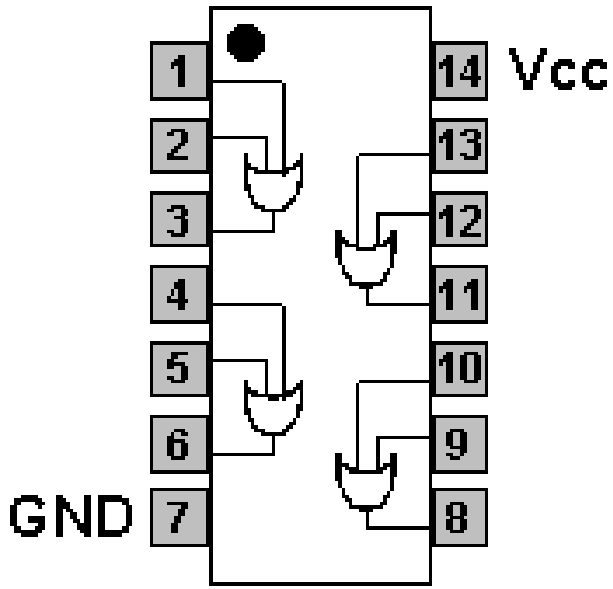

7432 or 74LS32

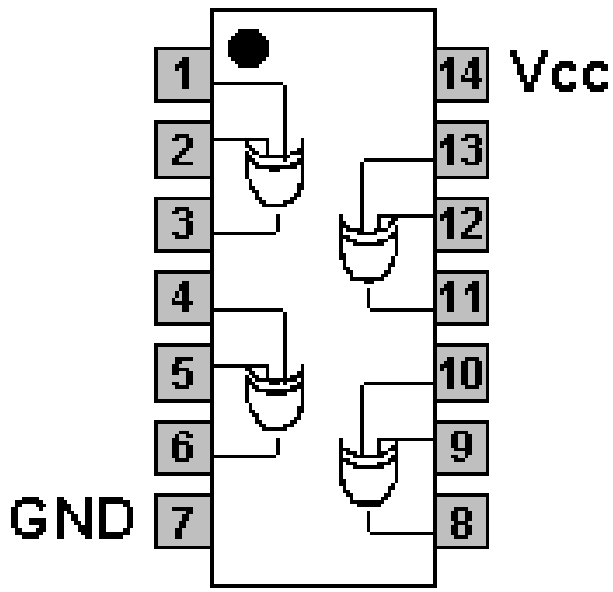

7486 or 74LS86

TTL Chips: 3-Input AND Gates

7411

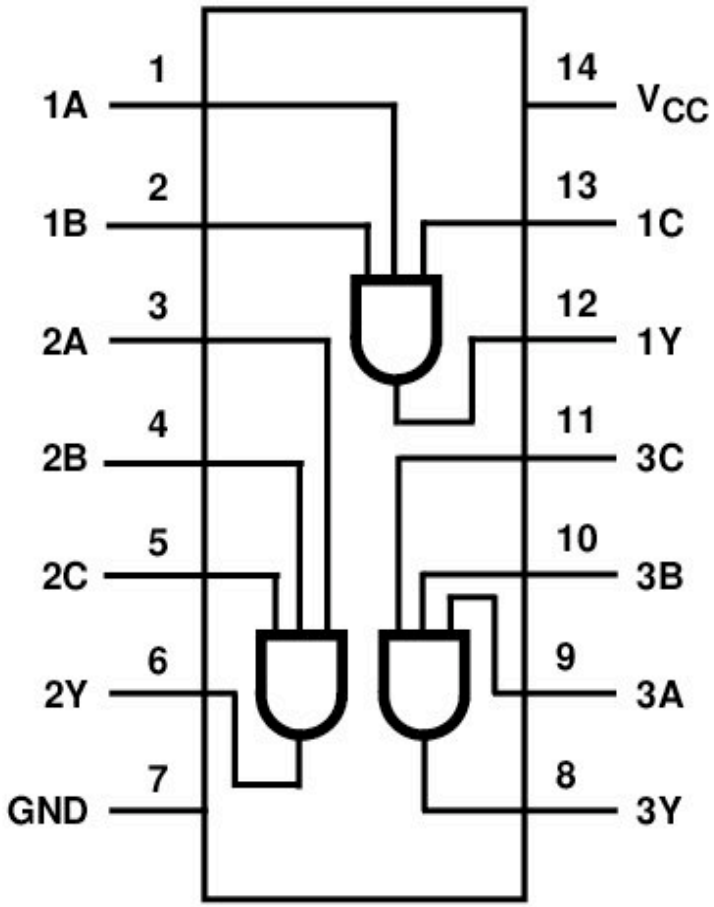

digikey.com

Constant Inputs

How do we configure a chip input as a constant?

Constant Inputs

How do we configure a chip input as a constant?

- For a constant 0: connect to ground
- For a constant 1: use a pull-up resistor to +5V (e.g., 10K ohm)

Wiring Procedure (Suggested)

- Power supply
- Power/ground buses
- Insert primary components
- Wire power/ground for components
- Add signals and remaining components
- Test incrementally

Debugging Techniques

- Multimeter:
  - Use *voltage mode* to check logic levels
  - Use *continuity mode* to confirm connections (but never with power turned on)
- Oscilloscope:
  - View voltage as a function of time on 2 channels
  - Locked in my office (Mark or I can retrieve them on request)
- Test incrementally
- Test intermediate sub-circuits

Debugging Techniques

Wire in LED to indicate logic level on a line

- For most components, do not allow the line to be driven by more than 20mA (check the specs if in doubt)

- Note that in this circuit, the LED turns on when logic level is LOW

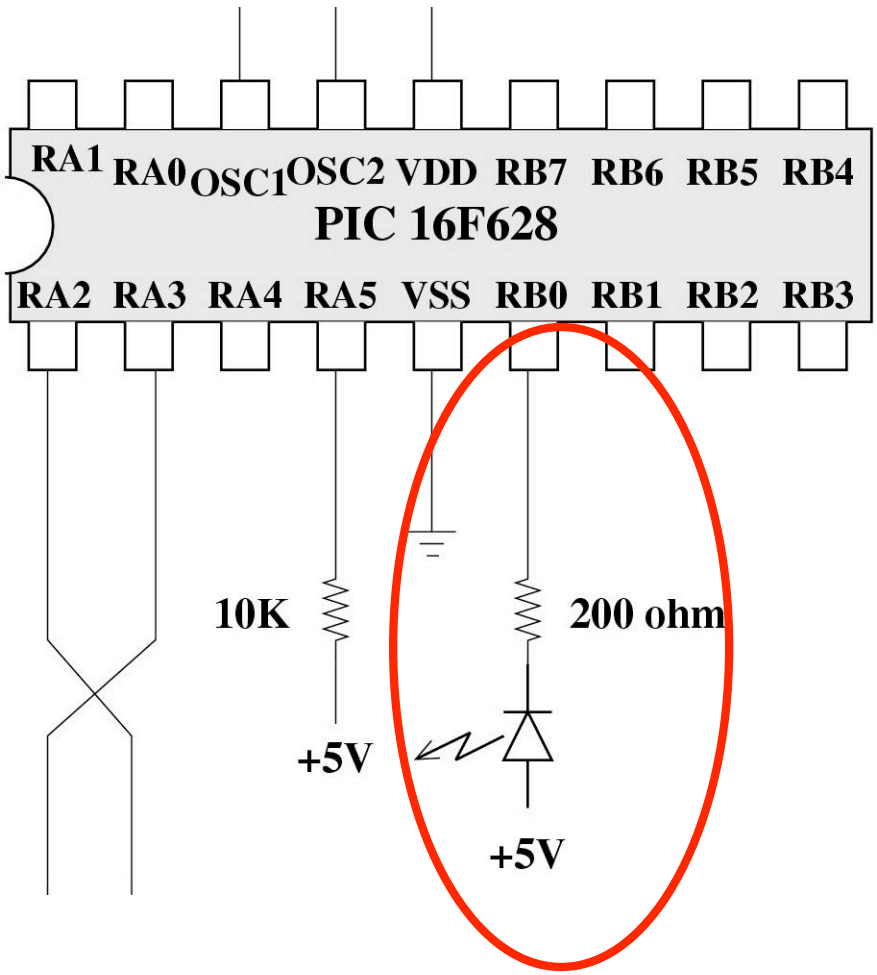

Project 1: Beacon Finder

- Robot is equipped with 4 infrared (IR) sensors
  - 2 facing forward
  - 2 mounted on a controllable turret
- 2 IR beacons in the environment

Project 1: Beacon Finder

Task:

- Robot starts by approximately facing one beacon
- Robot must turn to face beacon and then move toward it
- When the robot “sees” the second beacon to the left, the robot must stop

System Overview

4 IR Sensors

Preprocessor

Your circuit

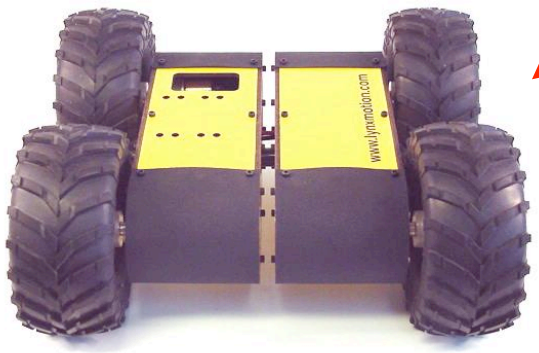

www.lynxmotion.com

Last Time

- Demultiplexers
- Tristate buffers
- Digital logic in practice
- Project 1

Today

- Finish off on project 1 (including a demonstration)
- Sequential logic:
  - Latches
  - Flip-flips

Administrivia

Mark (our TA) is out of town until Tuesday. The lab is still open starting today:

- 10:30-12:30
- 1-1:45
- 4:30-5:00

Hours next week should be as already discussed

Group Assignments

Group 1:
- Barby
- Carter
- Park
- Hoover

Group 2:
- Johnson
- Greco
- Schmidt
- Gunter

Group 3:
- Cohen
- Littlefield
- Culbreath
- Powers

Group 4:
- Lewis
- Williams
- Houck
- Blanton

Group 5:
- Tope
- Moore
- Watters
- Sartin

Beacon Receiver

The preprocessor translates the IR sensor signal into a 2-bit number

The state of each IR sensor is encoded with its own pair of bits

B1	**B0**		**Semantics**
0	0		No signal
0	1		Low signal
1	0		Medium signal
1	1		Strong signal

Robot Details

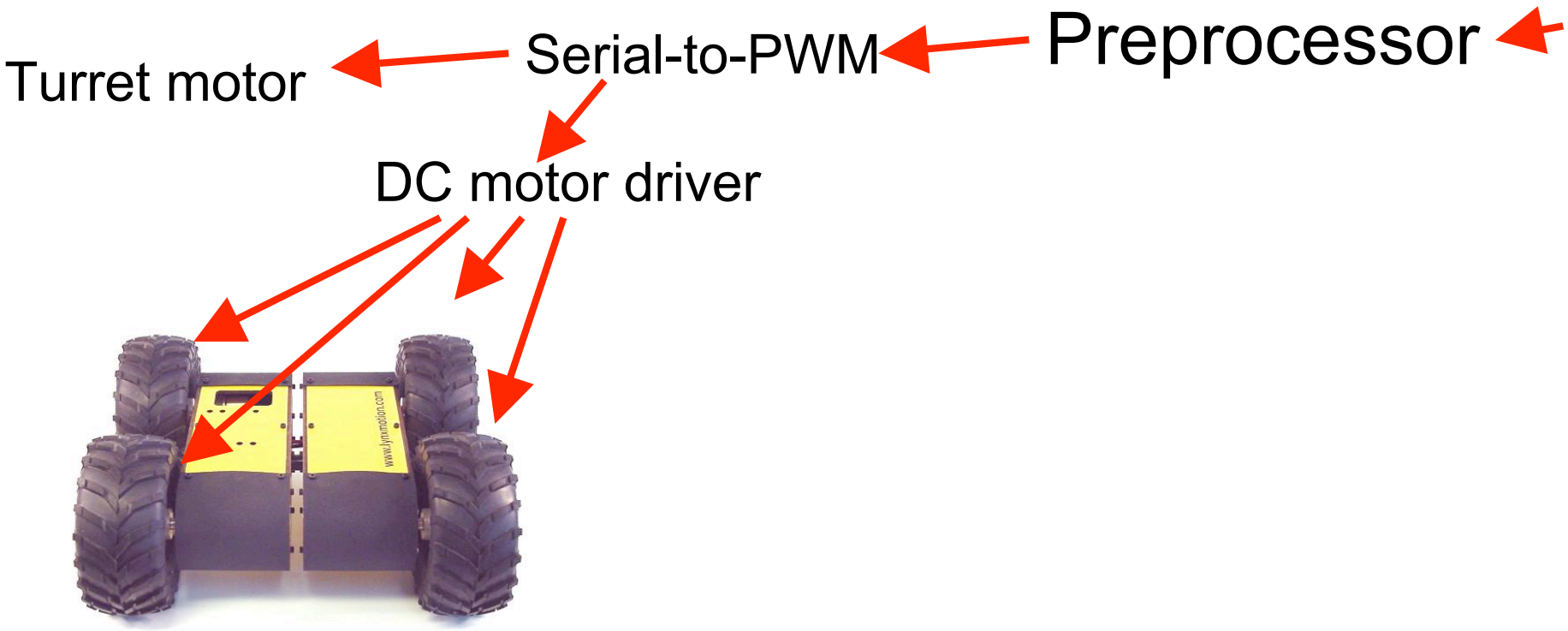

Robot Control Interface

3 output lines will determine the motion of the robot

C2	C1	C0		Semantics
0	0	0		Stop
0	0	1		Forward
0	1	0		Left
0	1	1		Right
1	0	0		Forward-Left
1	0	1		Forward-Right
1	1	0		Backward
1	1	1		x

Robot Control Interface

2 output lines will determine the turret position

T1	T0		Semantics
0	0		Forward
0	1		Left
1	0		Right
1	1		x

Your Job

Design and build a controller from basic logic gates

- Design the function: given each possible input from the sensors, what should the robot do?
- For each of these cases what command must you generate?
- What circuit will generate this command?
- Build the circuit

Hints

- A 7-chip design exists for this circuit
- The preprocessor includes LEDs that enable you to see its inputs and outputs
- Do not underestimate the amount of time required to implement and debug your circuit

Hints

- Secure wires before running the robot
- Make sure that you connect batteries properly and that you bring power to your circuit

Power

We will use 2 batteries:

- 7.2V for the DC motors
- 9V for the control electronics
  - The preprocessor circuit will step this down to 5V and provide it to your circuit

- Never short power and ground!
- Make sure you place used batteries in the appropriate boxes for recharging

What You Turn In

- Be prepared to demonstrate in class on Tuesday, March 1st
  - You may demo to Mark or me at any time prior to this class
- Project report:
  - Describe the function that you have implemented
  - K-Maps
  - Circuit design
- Personal report

Debugging/Safety Hints

- Start by testing your circuit prior to connecting motor power
- Once you connect motor power, put your robot up “on blocks” before running it on the floor
- Move a beacon around the robot to confirm that it performs appropriately
- Make sure you wire into your circuit the following rule:
  - If no beacon signal, then stop the motion of the robot

Lab Procedures

- No food or drink are allowed in the lab.
- Before leaving the lab, please be sure to clean up your workspace.
- Because some equipment may be in short supply, please coordinate with others who will need these resources
- Never place dead components back into the stock (instead – place them in the ‘graveyard’)

Lab Procedures

- No equipment or supplies may leave the lab without the permission of the monitor.
- No books may leave the lab.
- Please clear all guests with the lab monitor.
- Unless you have prior permission, please do not handle the projects of other class members.

Lab Procedures

- Always check your wiring before you power up your circuit (especially your power and ground connections).
- When removing chips from breadboards, always use an appropriate tool (not your fingers!).
- If you break something, please report it (don't just put it away).
- You are expected to supply and configure your own laptop computers for project use

Schedule

- We currently have 1 robot up and running – groups will need to share
  - The robots are designed so that you will be able to easily remove your circuit while leaving the other components intact

- We will soon have one robot for each group (but be patient)

Next Time

Sequential logic: time and memory

- Readings:
  - ESP 2.4
  - Sequential logic pages from playhookey.com